PTSPS061 World's Smallest Self-Powered Wireless Temperature Sensor

Product Overview

The PTSenR™ PTSPS061 Self Powered Wireless Temperature Sensor is mainly applied in temperature measurement of electrical junction which inside high and low voltage Switchgear. With 20 years of practical application and seven times technical upgrading, the sensor has been in the leading level in comprehensive aspects like product stability, anti-interference ability, practicability, lifetime, volume and so on, successfully applied in thousands of Industrial scenes globally.

The product adopts ultra-low power Long Band Width Wireless Protocol design, micro electromagnetic energy harvesting technology, no battery, radio frequency communication, CRC check and other technologies. It has the characteristics of green environmental protection, no maintenance, no calibration, complete electrical isolation, convenient installation, strong anti-interference ability, reliable work, small volume and so on, which can solve the problem of temperature measurement in high voltage state.

System Architecture

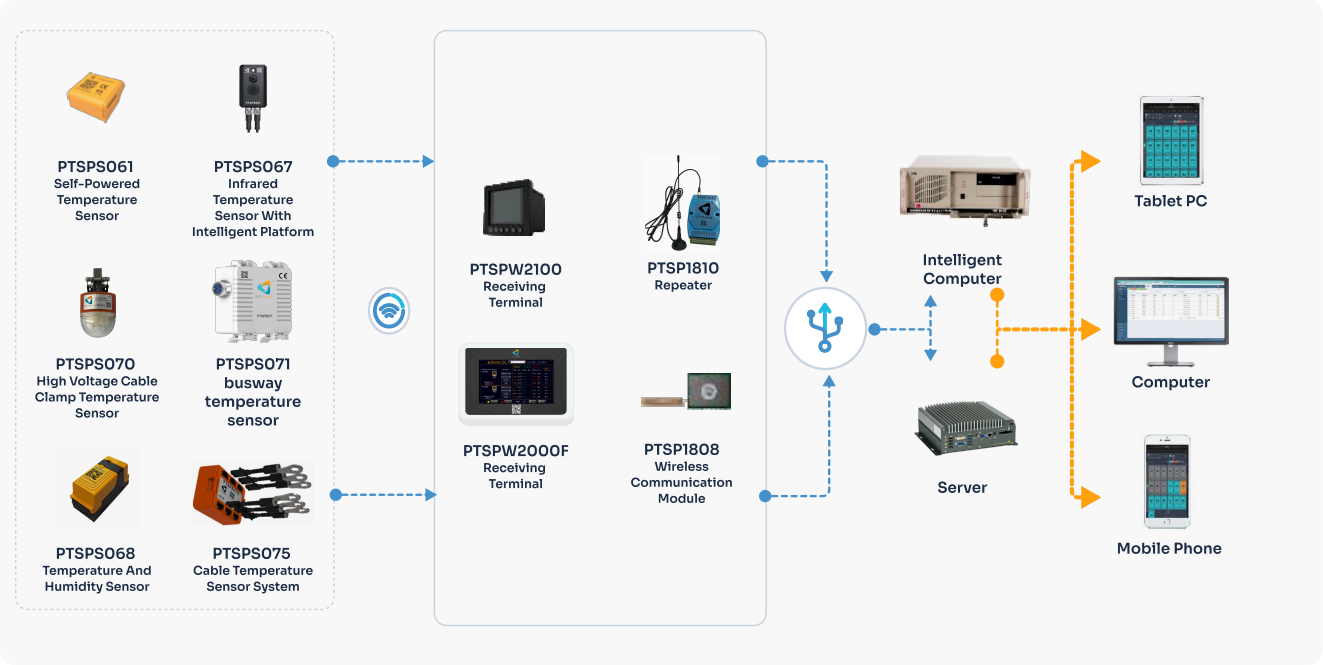

Applications

HT Switchgear

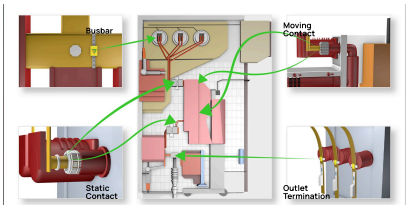

Transformer Incoming & Outgoing Line

Single-Core Cable

Characteristics

The PTSenR™ PTSPS061 Wireless Temperature Sensor is an advanced monitoring solution designed to protect electrical equipment by proactively identifying and preventing overheating. It utilizes precise sensing technology to deliver real-time temperature data across a range of electrical components, including switchgear contacts, cables, transformers, and distribution cabinets.

The sensor's unique design adapts to the specific thermal properties of materials commonly found in electrical systems. This allows it to effectively monitor components made from both silicon steel, which tends to generate excess heat, and alloy materials, known for rapid magnetic saturation. By tailoring its monitoring approach to the distinct characteristics of each material, the sensor ensures accurate temperature readings and minimizes the risk of false alarms or overlooked critical temperature elevations.

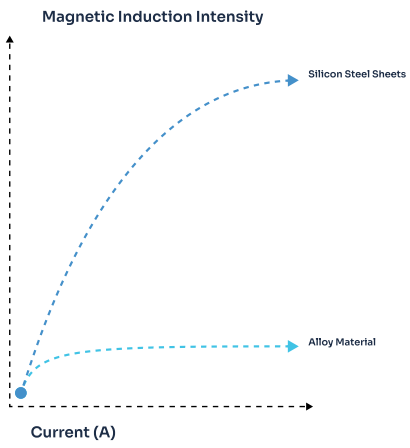

Dimensions

(Unit: mm)

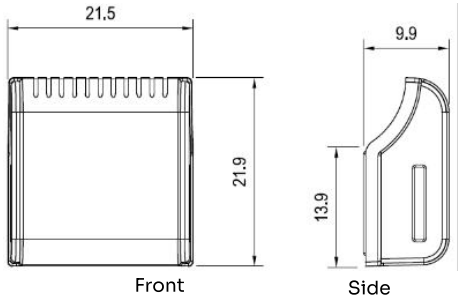

Specifications

Power Supply Input Voltage	Voltage Free & Battery Free
Energy Harvesting	≤5 A ~ 10,000 A
Operational Voltage	110 Vac - 1,000 KV
Wireless Operating Bandwidth	433.92 MHz
Transmission Power	10 dBm
Wireless Transmission Distance	0.4 ~ 20 meters (enclosed) / 500 meters upto 1 KM (open space - Line of Sight)
Communication rate	10 kbps
Temperature measurement type	Direct Contact-type
Relative Humidity	≤95% RH (non-condensing)
Storage Temperature	-40⁰C ~ 85⁰C
Operating Temperature	-40⁰C ~ 85⁰C
Temperature measuring range	-40 ~ 125⁰C
Measurement accuracy	±1.0⁰C
Measurement interval	10 seconds

Transmission interval	20 to 100 seconds, the higher the temperature of the sudden change, the shorter the transmission interval
Protection level	IP 68
Flammability Rating	V 0 (700⁰C 30 Sec)
Service life	≥20 years
Compliance	EN 62479;EN 61326; EN 61284; EN 220, 300, 301, 400, 489; IEC 60529; IEC 61010; IEC 60068; IEC 60061; IEC 60270; DNVGL-CG-0339, UL508
Communication Rate	2400 bps ~ 115200 bps (Default 9600bps)
Communication Protocol	Standard Modbus-RTU protocol
Ordering Information	
Part Number	Product Description
PTSPS061	PTSenR™ Temperature Wireless Sensor